GRANDIO

GREENHOUSES

2015 GRANDIO ASCENT BACK WALL TRANSFORMATION KIT

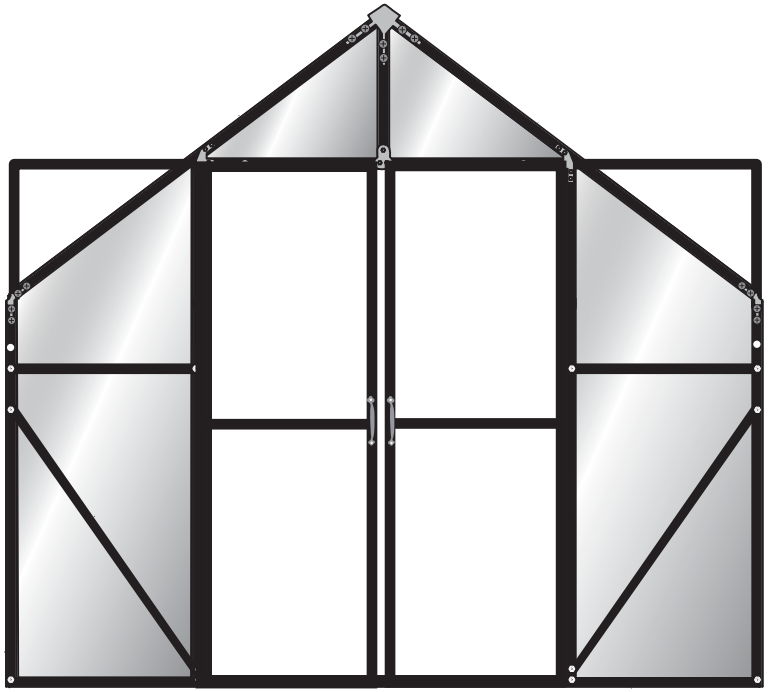

GRA-ASC-BD
BACK WALL TRANSFORMATION USER MANUAL

© 2013 Grandio Greenhouses, Backyard Living Source Inc. All rights reserved
2015 Manual Edition Back Wall Transformation Kit

GRANDIO
GREENHOUSES

Dear Valued Customer,

We would like to congratulate you on your new Grandio Greenhouse purchase. We are confident that you have made the right decision in choosing Grandio. Our greenhouses are made with high quality aluminium and polycarbonate and will last for many garden seasons to come.

Please take the time to carefully read this instruction manual for an easier and more enjoyable assembly experience.

Cheers!
Grandio Greenhouses

Save this owner's manual for future reference and if you need our help.

CONTACT OUR CUSTOMER SERVICE DEPARTMENT at:
1-866-448-8231

Hours: 8:30a.m.-5:00p.m. Monday through Friday (Mountain Standard Time)

Backyard Living Source
9543 W. Emerald St., Suite 101
Boise, ID 83704
www.grandiogreenhouses.com

IMPORTANT! READ BEFORE BEGINNING ASSEMBLY

THIS BACK DOOR TRANSFORMATION MANUAL IS FOR CURRENT GREENHOUSE OWNERS THAT ARE SWITCHING OUT THEIR BACK WALLS ONLY.

SEE OPTIONS BELOW FOR FURTHER EXPLANATION.

OPTION 1 - 1ST TIME BUILDING GREENHOUSE KIT

You will discard this manual and use only the manual that came with your greenhouse kit. Your manual included in your greenhouse kit will tell you how to build the back wall with a door.

OPTION 2 - SWITCHING OUT EXISTING BACK WALL

You will use this manual to easily remove the back wall you currently have on your greenhouse and modify it with this kit to create a new back door.

- Follow the step by step instructions.
- Only perform this switch out on a wind free or calm day.
- Inventory all parts with the parts list on page 26.
- You must have at least 2 people for assembly.

IMPORTANT! SAFETY INSTRUCTIONS

FAILURE TO FOLLOW THESE WARNINGS MAY RESULT IN SERIOUS INJURY OR PROPERTY DAMAGE AND WILL VOID WARRANTY.

To ensure safety, do not attempt to assemble this product without following the instructions carefully. Check entire box and inside all packing material for parts and/or additional instruction materials. **Before beginning assembly, read the instructions and identify all parts using the hardware identifier and parts list on page 26. Complete assembly and proper usage are essential to reduce the risk of accident or injury when using your Grandio Greenhouse.**

CAUTION: Do not leave polycarbonate panels laying on grass or leave in the sun or extreme heat, keep in a cool dry place until they are to be installed!! (May cause burning to plants or grass if left directly on top of them, also may damage panels due to the protective film adhering to panels.) Panels may scratch easily. **Do Not** use solvent cleaners.

• Each of the polycarbonate panels have a clear film side that should always face the sun, and an white film side which faces inside. The clear side has a UV coating and we recommend marking a small "x" on a corner of each panel to determine which side has the UV Coating as you cannot visually determine with your eye in the case of future disassembly.

• Due to shipping, the grooves of some of the aluminum profiles may be too small to insert into the polycarbonate sheet, you may carefully use a screwdriver to pry the framework open so the polycarbonate sheet can be inserted smoothly.

• Do not use or store hot objects such as grills, blow torches, welding equipment, etc. in or near your greenhouse.

• Do not allow children or pets to play in greenhouse or in the set up area until assembly is complete.

• If using a ladder during assembly, use extreme caution.

• A clean level surface is essential to maintaining the solid integrity of the structure, Install the base correctly as described in manual. Please anchor the greenhouse down to a firm and level base.

NEEDED FOR ASSEMBLY

- **Tape Measure**
- **Level**
- **Carpenter Square**
- **At Least 2 Adults**
- **1 Step Ladder**
- **Work Gloves**
- **Permanent Marker**
- **Masking Tape**
- **Safety Glasses**
- **Drill Is Helpful**
- **Knee Pads**
- **Folding Utility Table**

GRANDIO TIP

When you see this icon pay special attention to the helpful tips we have provided that will make installation more efficient.

GRANDIO GREENHOUSE
BACK DOOR KIT DIAGRAM

DIAGRAM SHOWS THE ASSEMBLED BACK WALL TRANSFORMATION OF THE GRANDIO ASCENT GREENHOUSE.

⚠ IMPORTANT: POLYCARBONATE PANELS ⚠

The UV-Protected side is covered with clear film and must face toward the sun. The side covered in white film will always face the interior of the greenhouse. We suggest you peel all film off completely prior to assembly and use a permanent marker to place a small "X" on the lower right corner of each panel on the clear side that faces the sun, each panel has a sticker labeling the panel number and this side always faces the sun or outward as well. **DO NOT REMOVE LABELS UNTIL YOU INSTALL PANELS**. The "X" is suggested in case you dis-assemble your greenhouse in the future so you may identify which side has the UV coating. Always use gloves when handling the polycarbonate panels as the edges can be very sharp.

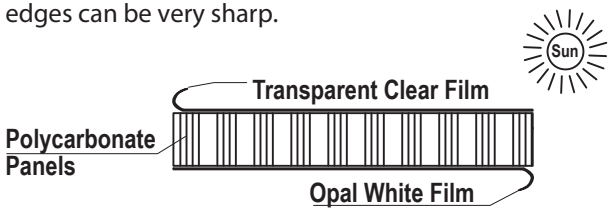

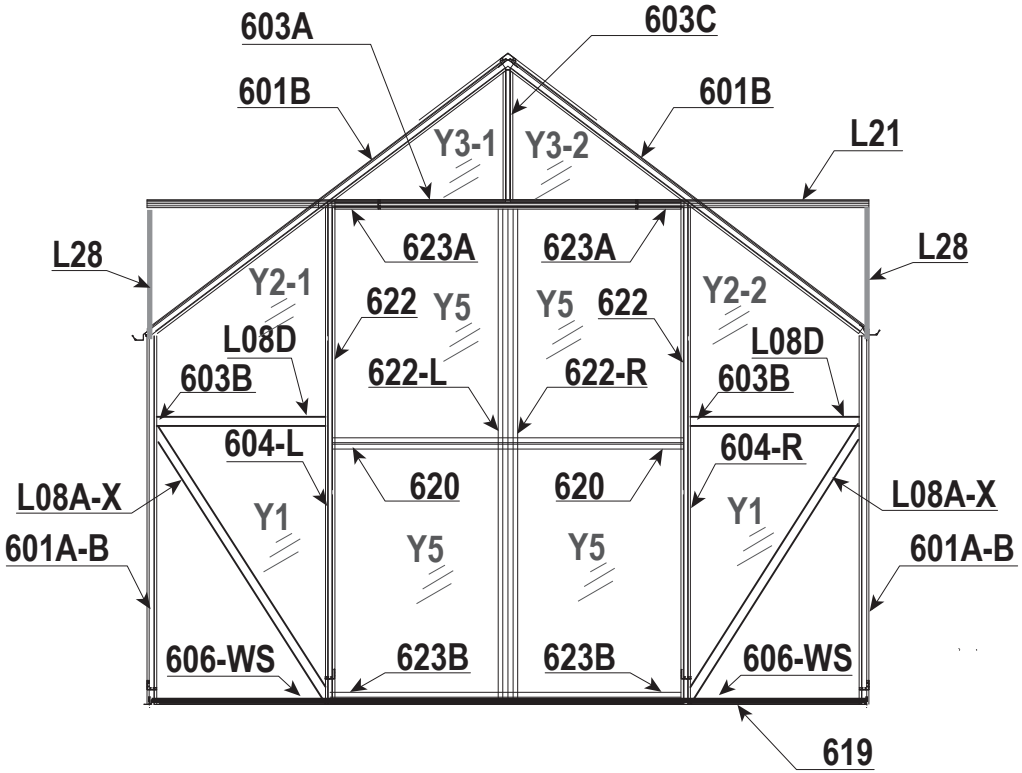

BACK

Outside View

GRANDIO©
GREENHOUSES

ASSEMBLY INSTRUCTION STEPS

PREPARE FOR ASSEMBLY

STEP ONE: DETACHING BACK WALL

STEP TWO: BACK WALL DOOR ASSEMBLY

STEP THREE: REATTACH BACK WALL

STEP FOUR: DOOR ASSEMBLY

STEP FIVE: PARTS LIST

Introduction & Prepare For Assembly.....1
Safety Instructions.....2
Diagram of Assembled Back Door.....3
Detaching Back Wall.....5-8
Back Door Assembly.....9-14
Attaching Back Door Wall.....15-18
End Cap Installation.....19
Door Assembly.....20-25
GRA-ASC-BD Parts List.....26
Warranty.....27

DETACHING BACK WALL INSTRUCTIONS

YOU WILL NEED AT LEAST 2 PEOPLE TO REMOVE THE BACK WALL FOR SWITCH OUT

1.1 Detach all **J602A-E**, **JG02B-E**, and the back wall **J601** end caps from the ridge and gutters on both front and back of your greenhouse as shown below. Set aside all end caps and hardware in a safe place for reinstallation later.

1.2 Detach the **L28** from only the top **L21** as shown, let it fall to the side out of the way of the end caps on the side with the doors. See **A**.

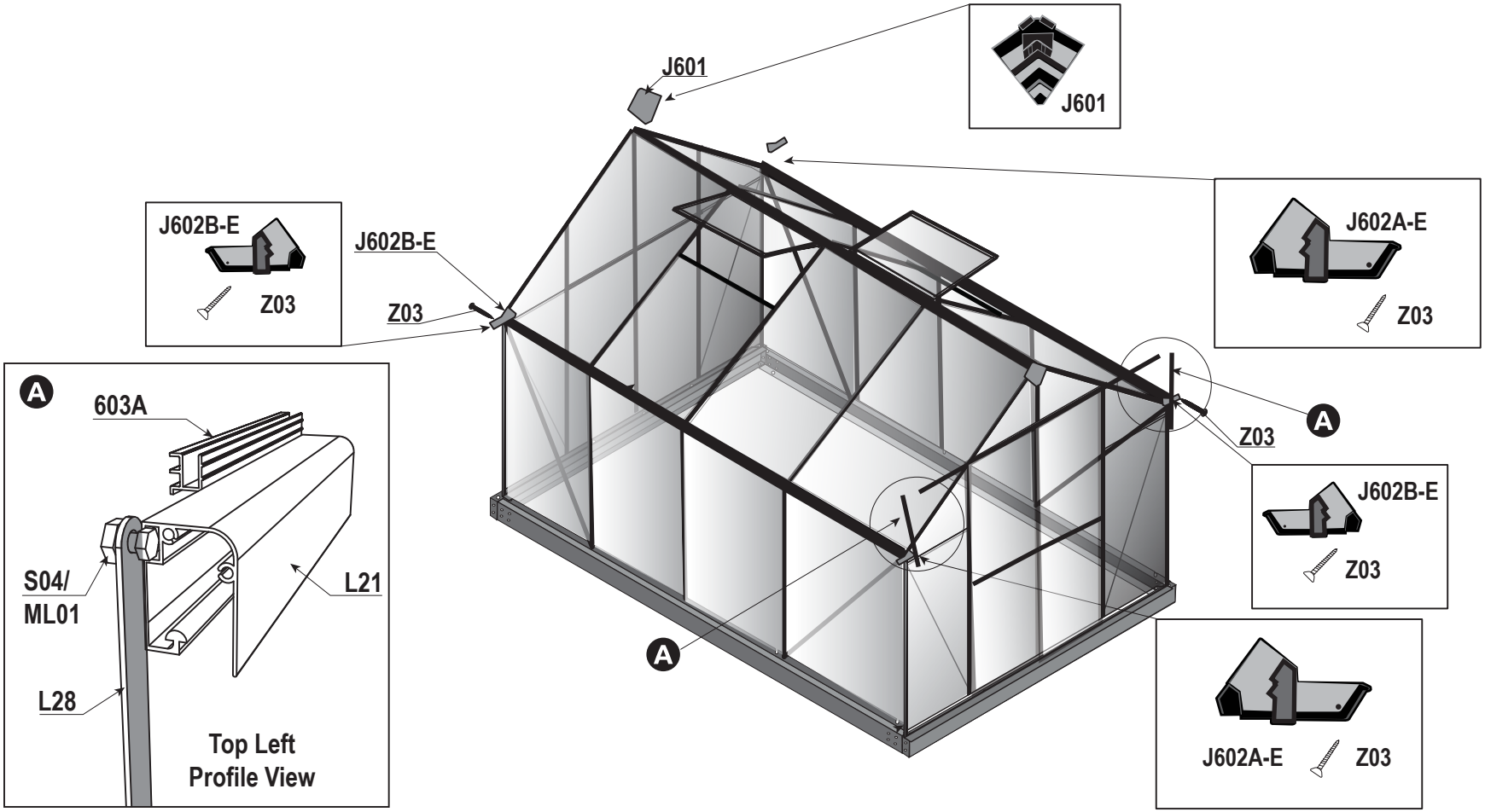

STEP ONE

DETACHING BACK WALL INSTRUCTIONS

YOU WILL NEED AT LEAST 2 PEOPLE TO REMOVE THE BACK WALL FOR SWITCH OUT

1.3 Slide **610** out only one panel section, of **609's** groove as shown in diagram **A**. Remove **Y6** panel and **Y7** panel. Repeat on other side of greenhouse.

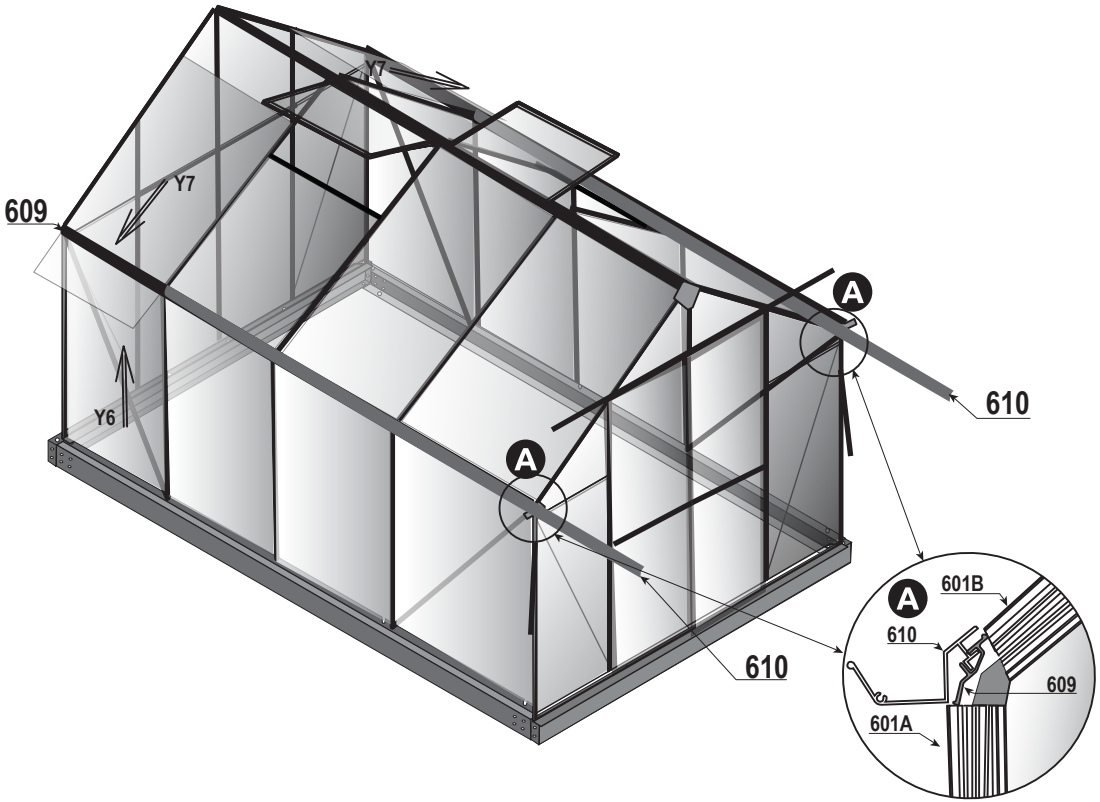

STEP ONE

DETACHING BACK WALL INSTRUCTIONS

YOU WILL NEED AT LEAST 2 PEOPLE TO REMOVE THE BACK WALL FOR SWITCH OUT

1.4 Be sure one person is on the outside of the greenhouse holding and supporting the back wall as the person inside detaches all back wall hardware.

1.5 Loosen the **S04/ML01** screws that attach the **607** Roof Ridge to the back wall see **A**. Loosen the **S04/ML01** that hold the **609** Eave Support to the back wall as shown in **B**. Remove the back wall **S04/ML01** nut and bolt combo from the **L08C** on both sides**.**

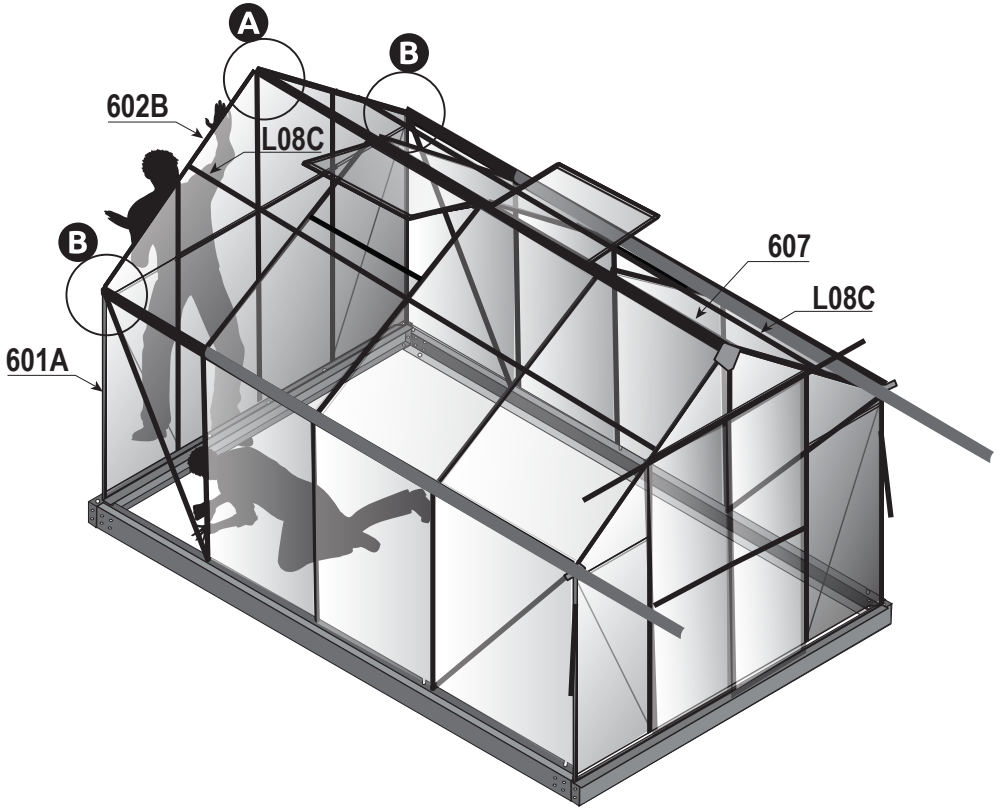

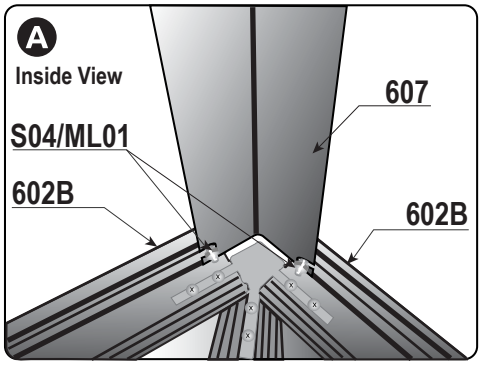

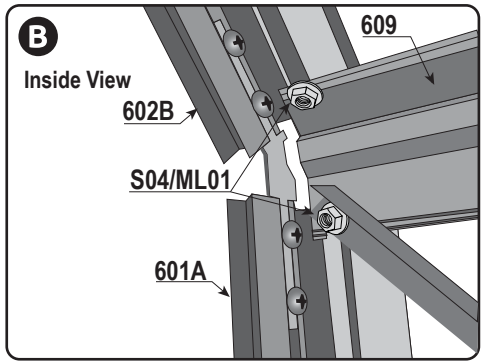

STEP ONE

MIDDLE ASSEMBLY CONTINUED

1.6 Detach the back wall **601A's** with back base corners by loosening the **S04/ML01** on both sides as shown in **A**. Release the **W05 Clips** shown, but replace the **W05 Clip** with the nut and bolt combo to keep the back wall in tact for moving.

1.7 Detach bottom of **L08C-X** at rear section of base kit by loosening **S04/ML01**, as shown in **B**. Detach the **L08C-X** from the **601A** as shown in **C** by loosening **S04/ML01** combos.

1.8 Release the (3) remaining **W05 Clips** from the back wall where the **602D's** and **602C** meet the **BA-S1** see **D**. Then replace **W05 Clip** combos with **S04/ML01** nut and bolt combos to hold back wall together for removal. The back wall should be free from the middle section and base kit, you and other person will want to gently pull apart and lay flat, with the outside facing down on a tarp. Begin disassembling the back wall, keep pieces in their respective places to get ready for the back wall to door transformation assembly. Place all nuts, bolts and hardware into a safe place such as a container with a lid.

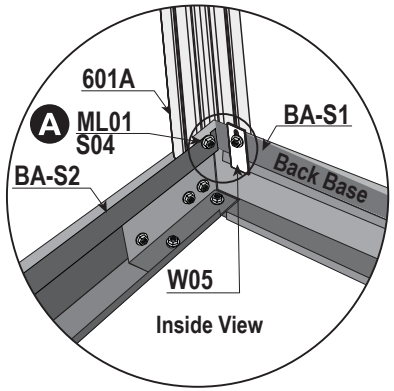

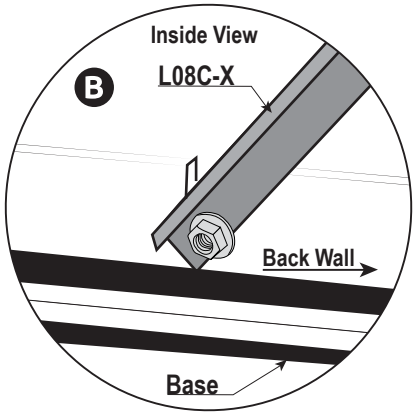

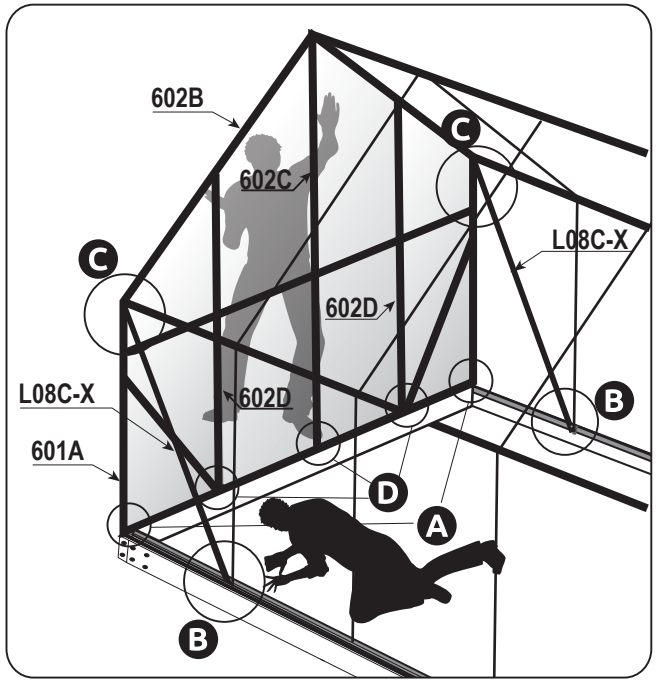

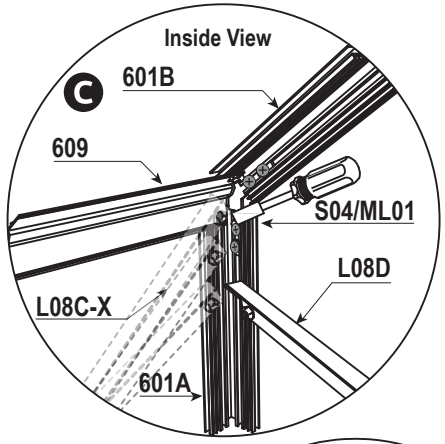

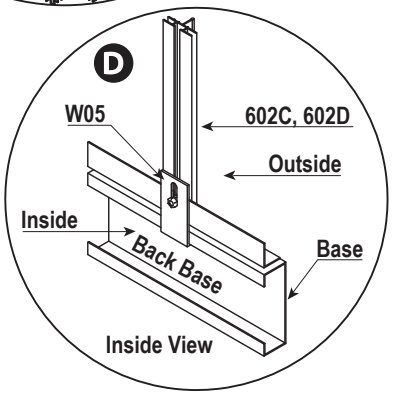

STEP ONE

BACK WALL DOOR ASSEMBLY

ALWAYS ASSEMBLE FRONT HORIZONTAL

This picture shows the inside view of the front and or back door fully assembled.
All parts for this section will be found in boxes GRA-ASC-BD
We recommend that you assemble the front wall on a tarp.

STEP TWO

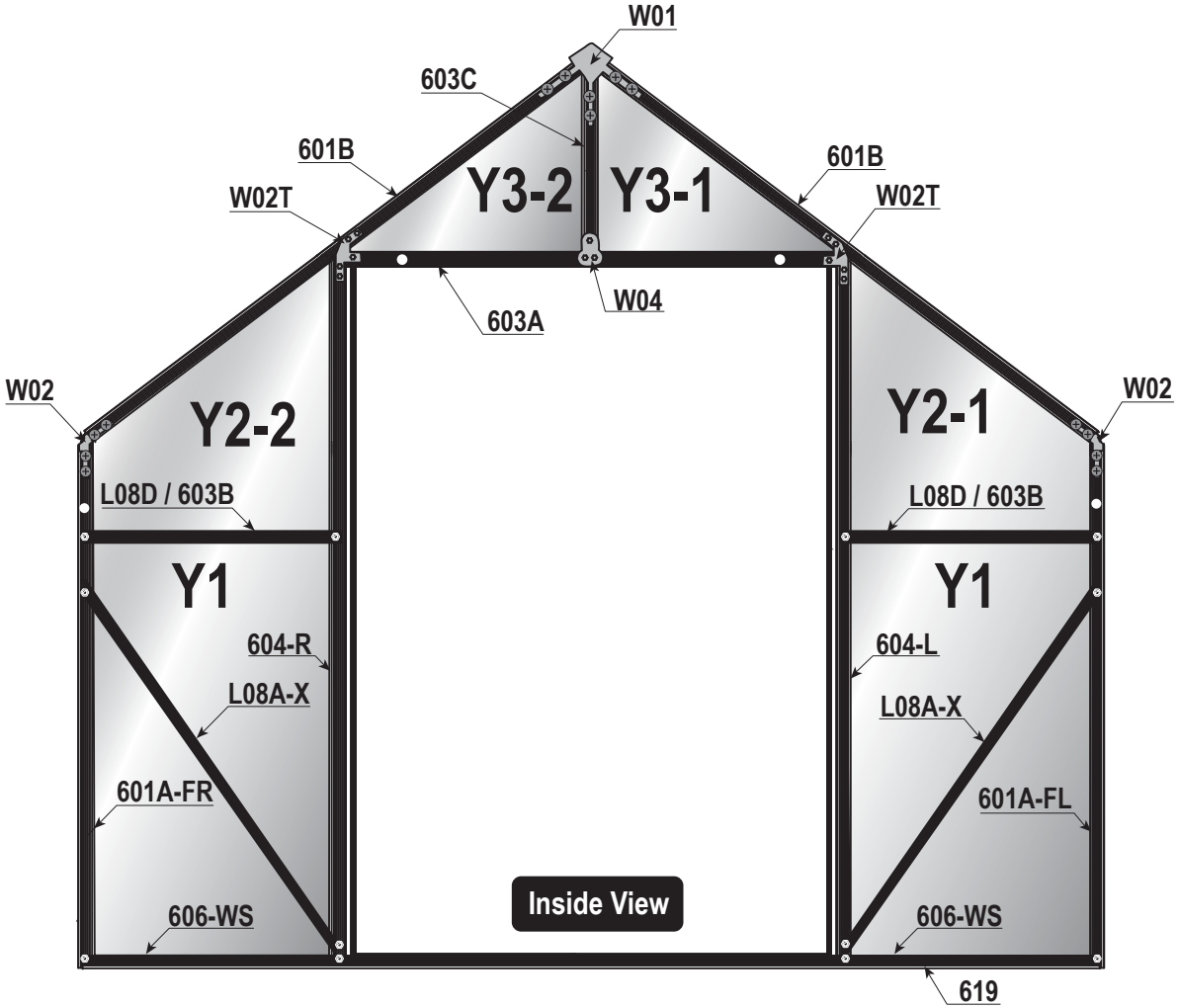

GRANDIO TIP

We recommend watching our how to assembly videos with tricks and tips for easier assembly and installation of your Grandio Greenhouse at: **www.grandiogreenhouses.com**

GRANDIO TIP

Lay flat on ground to assemble the front frame of your greenhouse. If possible try to find a shady area protected from the wind. Panels can burn grass and plants if in direct light.

GRANDIO TIP

BOLT INSTALLATION TIP: Locate all nuts and bolts, pre thread and place in the groove of the extrusion to make installation easier. Move up or down for exact placement.

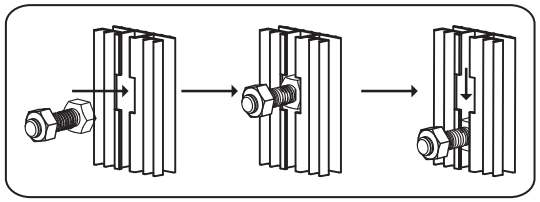

BACK WALL DOOR ASSEMBLY CONTINUED

ALWAYS ASSEMBLE FRONT AND BACK HORIZONTAL

2.1 Use **W01** bracket to attach the (2) **601B's** together with the **603C**, secure parts with the **S05** fasteners provided as shown in **A**. Pre thread **W01** fasteners with **S05** for ease of installation, only turn a few times. Screw heads will remain outside channel.

2.2 Insert **Y3-1** and **Y3-2** window panels as shown in **B**.

2.3 Attach **603C** and **603A** with **W04** and **S04/ML01** fasteners as shown in **C**.

2.4 Attach **W02T** to **601B** and **603A** with the **S04/ML01** fasteners as shown in **D**, leave screws a bit loose to ease installation of next step.

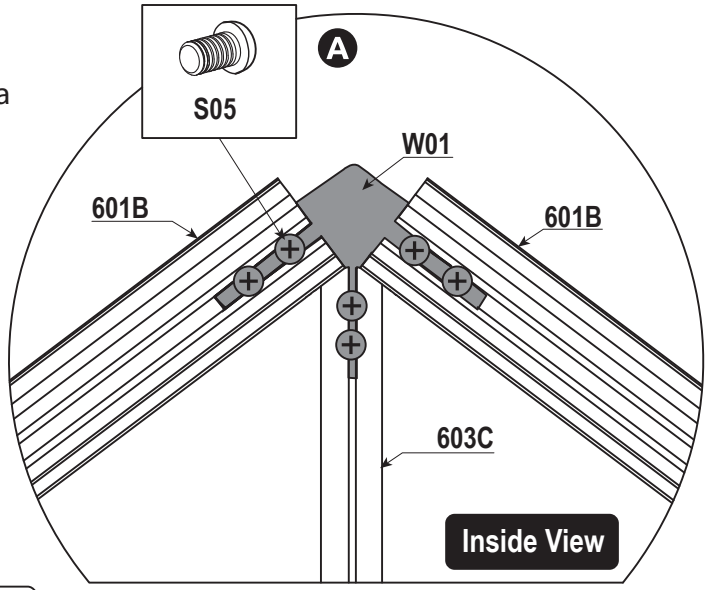

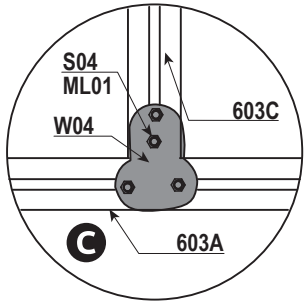

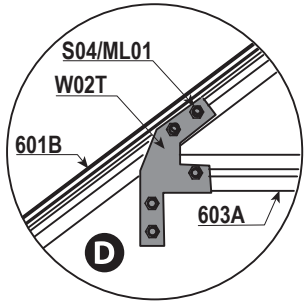

⚠ *IMPORTANT: POLYCARBONATE PANELS* ⚠

The UV-Protected side is covered with clear film and must face toward the sun. The side covered in white film will always face the interior of the greenhouse. We suggest you peel all film off completely prior to assembly and use a permanent marker to place a small "X" on the lower right corner of each panel on the clear side that faces the sun, each panel has a sticker labeling the panel number and this side always faces the sun or outward as well. **DO NOT REMOVE LABELS UNTIL YOU INSTALL PANELS**. The "X" is suggested in case you dis-assemble your greenhouse in the future so you may identify which side has the UV coating. Always use gloves when handling the polycarbonate panels as the edges can be very sharp.

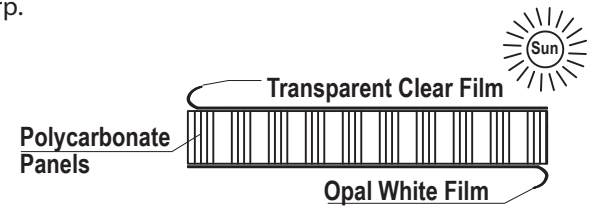

⚠ IMPORTANT: Use only S05 Screws, other screws may damage frame. ⚠

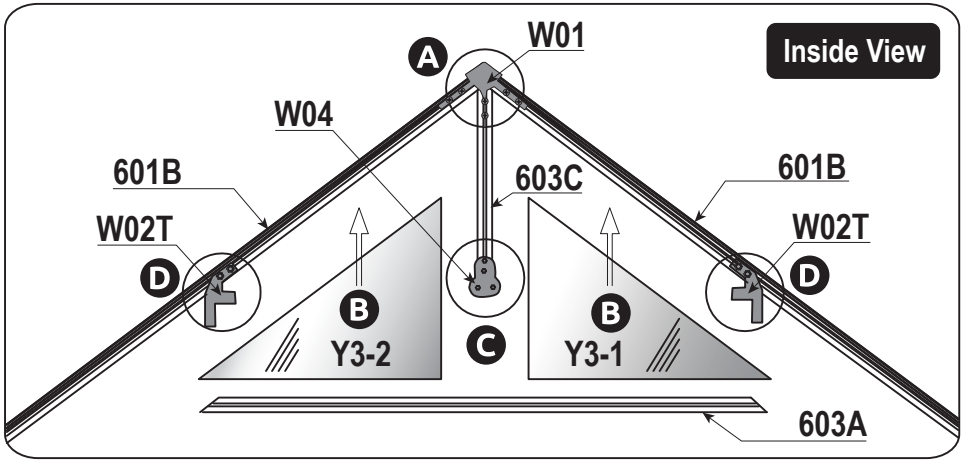

STEP TWO

BACK WALL DOOR ASSEMBLY CONTINUED

ALWAYS ASSEMBLE FRONT AND BACK HORIZONTAL

2.5 View diagrams and attach the (2) **604's** and (2) **601A's** to the **619** with the **S04/ML01** nut and bolt combos. Note the orientation of the **604's**, also there are 4 different **601A's** (2) for the front and (2) for the back with different hole placements. You will need to drill the holes for the back section to match the front holes. See diagram on this page. The **601A-FR** and the **601A-FL** will have a hole at the top side and will face to the ground during assmbly or back of greenhouse, please drill 1/4" holes for your **601A-B's** to match the **601A-FL** and **601A-FR** this will transform your back wall for hanging the doors.

A shows where the corner pieces attach to **619**.

B shows where the door frame attaches to the **619**.

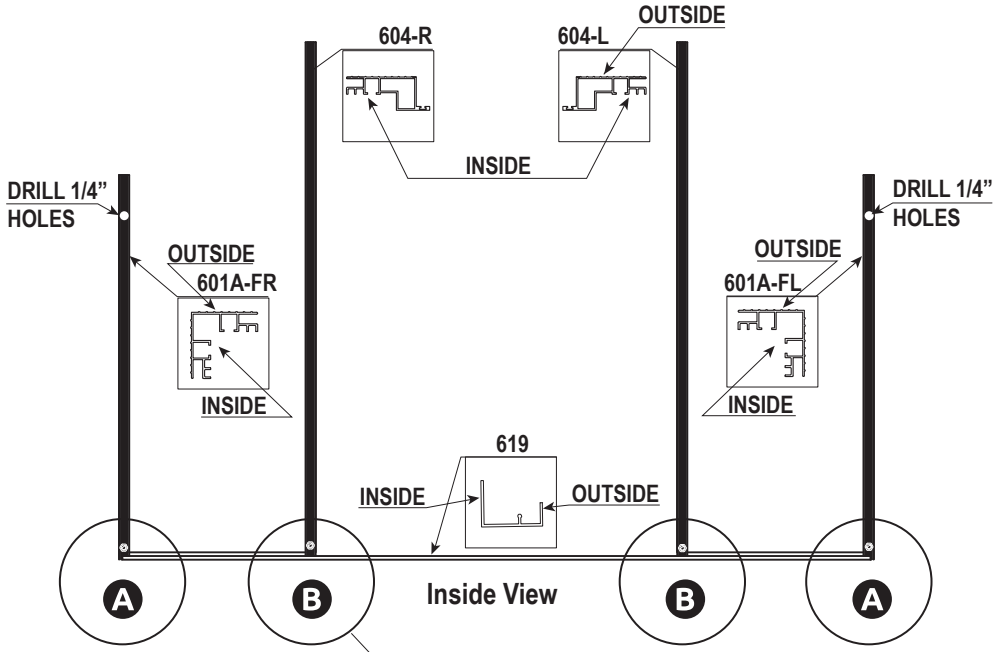

TIP: If necessary you may use a screwdriver to wedge behind the bolt head. This prevents bolt from falling into the track.

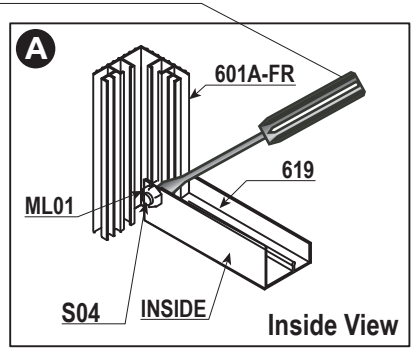

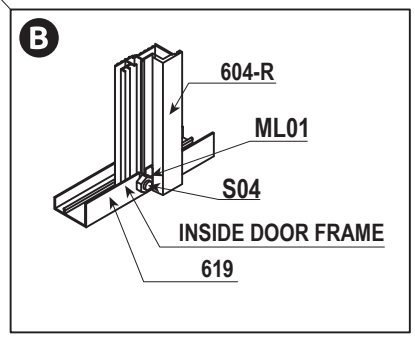

GRANDIO TIP

Make sure the hole on the **601A-FL** and **601A-FR** face to the front of greenhouse for future of the **L21** and **L28** bracket that holds the door header in place.

GRANDIO TIP

BOLT INSTALLATION TIP: Locate all nuts and bolts, pre thread and place in the groove of the extrusion to make installation easier. Move up or down for exact placement.

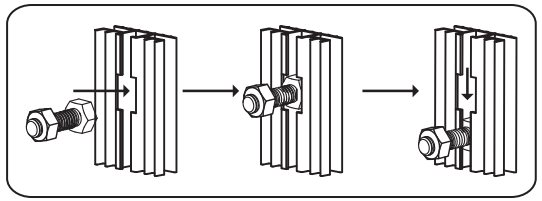

STEP TWO

BACK WALL DOOR ASSEMBLY CONTINUED

ALWAYS ASSEMBLE FRONT AND BACK HORIZONTAL

2.6 Attach **606-WS** to **619**, this will hold the polycarbonate panels in place. If it seems too tight slide fingers or nut driver along edges, gently stretching the **606-WS** to allow room for panels to fit **A**.

2.7 Insert **Y1** polycarbonate panels into place, make sure **Y1's** slide completely into **606-WS** as shown in **A**.

2.8 Set (2) **603B's** atop the **Y1** panels, then attach (2) **L08D's** to the **603B's**, **601A's** and **604's** using **S04/ML01** fasteners, make sure it is snug with the tops of the **Y1** panels, then tighten fasteners. See **C**.

2.9 Insert the **Y2-2** and **Y2-1** polycarbonate panels into the track of the **603B**.

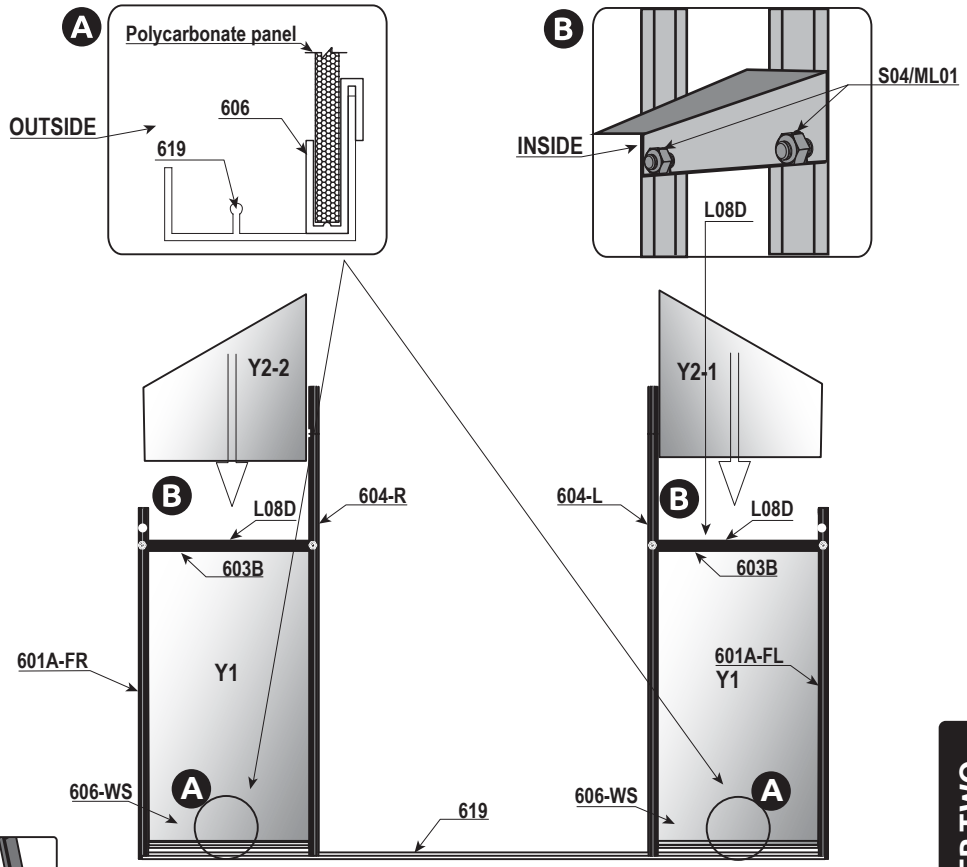

Inside View

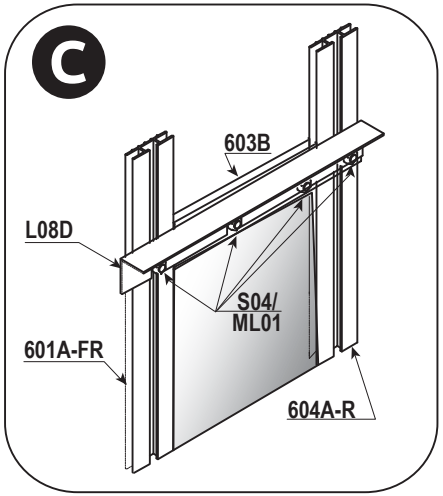

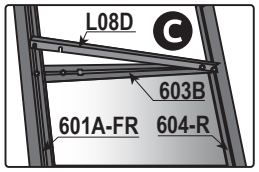

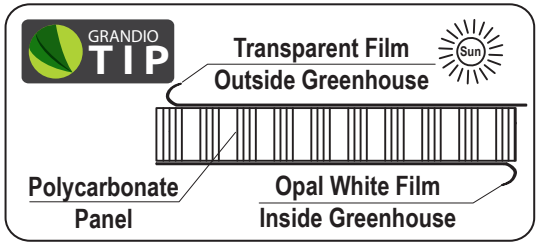

STEP TWO

BACK WALL DOOR ASSEMBLY CONTINUED

ALWAYS ASSEMBLE FRONT AND BACK HORIZONTAL

2.10 Move roof and front section together and align the **WG02's** into the **601A's**, and align the **S04/ML01's** on the **W02T's** into the **604's**. Insure a snug fit between the **W02T's, 601B's** and **601A's** and then tighten the **S05** screws as shown in **A**. Tighten the **W02T's** with the **S04 /ML01** nut and bolt as shown in **B**.

STEP TWO

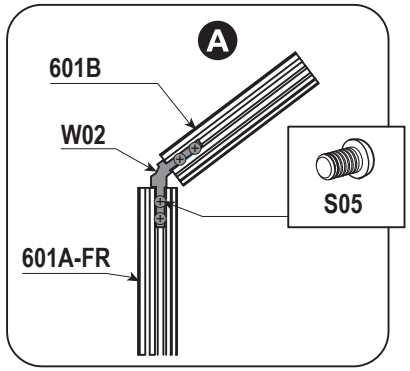

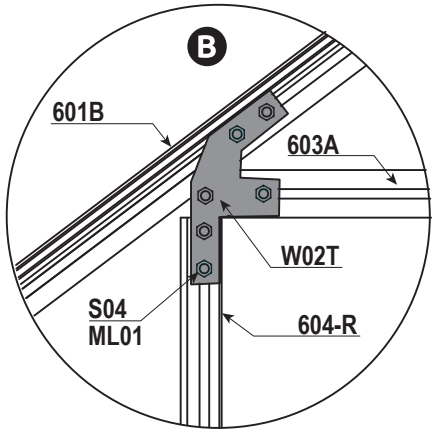

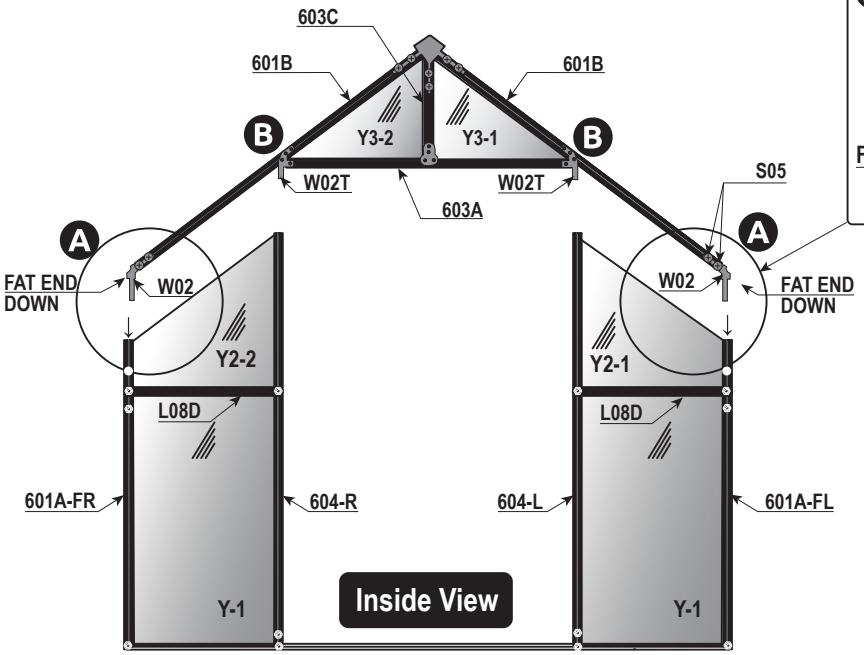

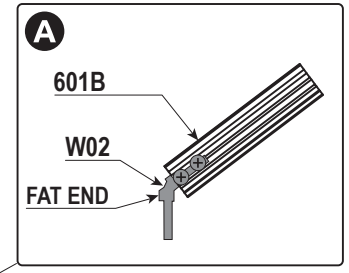

BACK WALL DOOR ASSEMBLY CONTINUED

ALWAYS ASSEMBLE FRONT AND BACK HORIZONTAL

2.11 Attach the (2) **L08A-X** to **601A's** and **604's**.
See **A** and **B**.

2.12 To square front section loosen **S04/ML01** attached to the tops of the (2) **L08A-X's**, square the frame with carpenter square or use a measuring tape to make sure corner measurements are the same, tighten **L08X's** to hold squareness, **L08A-X** should be attached **1"** up from bottom bolt see **B**.

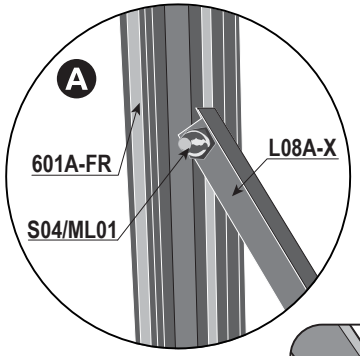

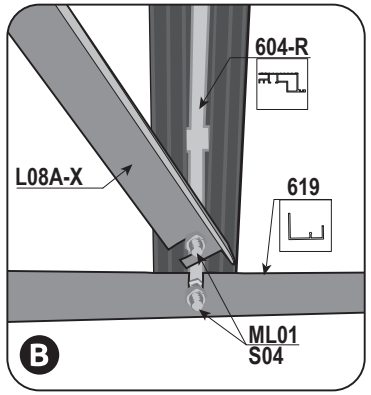

Set front aside in a shaded area, do not lay on grass, prolonged sunlight through the polycarbonate panels will burn if placed directly on top of plants during the intense sun of the day.

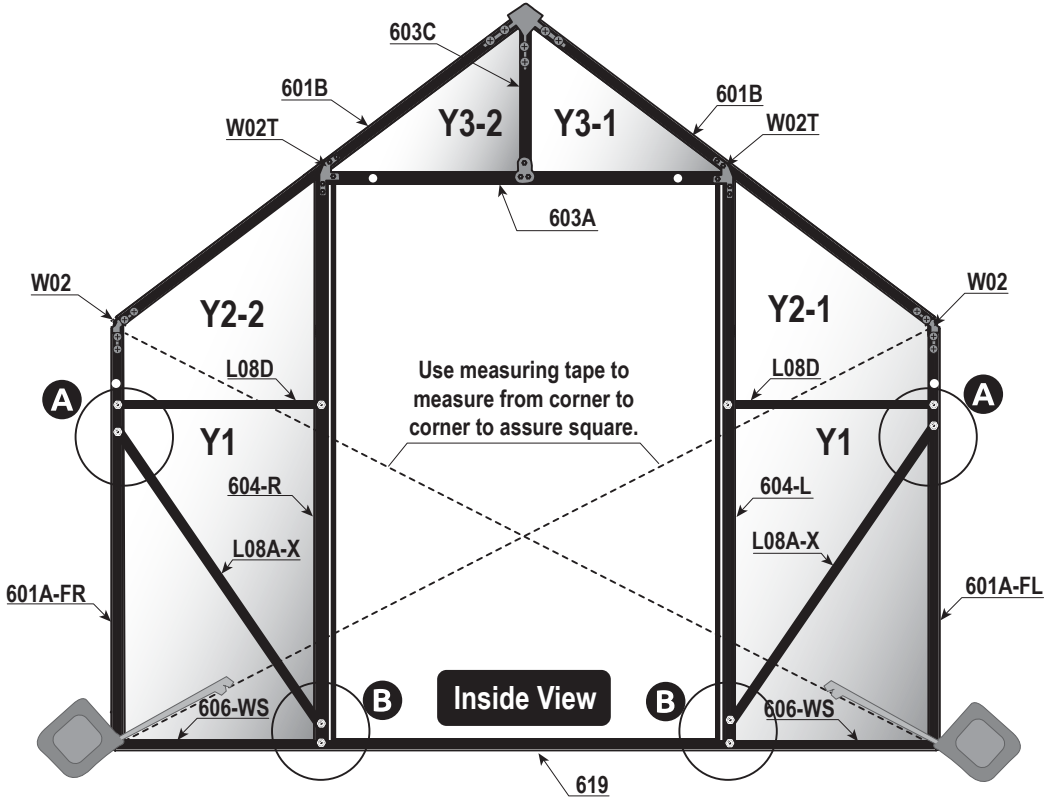

STEP TWO

RE-ATTACH BACK WALL ASSEMBLY

YOU WILL NEED AT LEAST 2 PEOPLE TO INSTALL THE BACK DOOR WALL

Warning: Proceed only if you are replacing a back wall on an existing greenhouse.

3.1 With no less than **2 people** place the pre assembled front section on top of the base kit back. Have person **(1)** hold the back wall vertically while the other attaches the back section **601A's** to the sides of base using **S04/ML01** fasteners as shown in **A**. Person **(1)** must continue to hold up the front wall!

3.2 See diagram **B** for overview of back wall. Use the **S04/ML01** screws to attach the **607** (Roof Ridge) to the back wall see **C**. Use the **S04/ML01** to attach the (2) **609's** (Eave Supports) to the back wall as shown in **D**.

STEP THREE

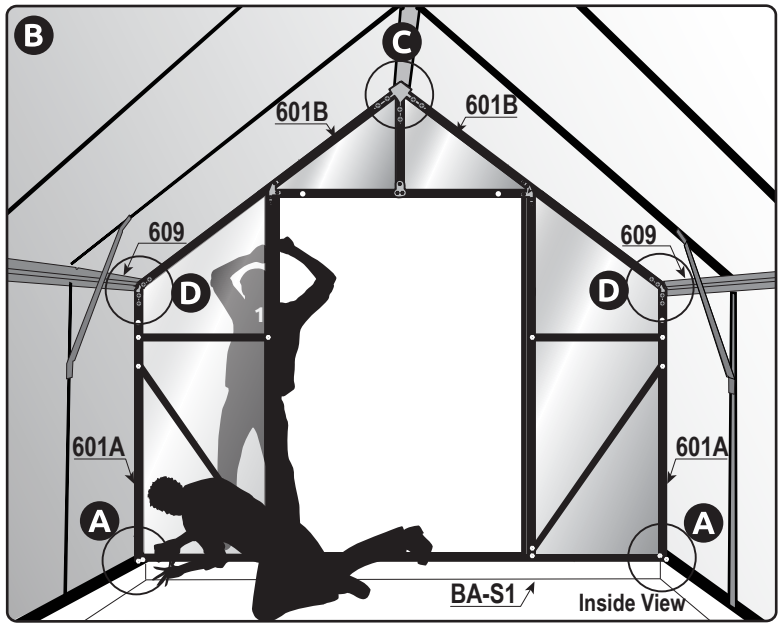

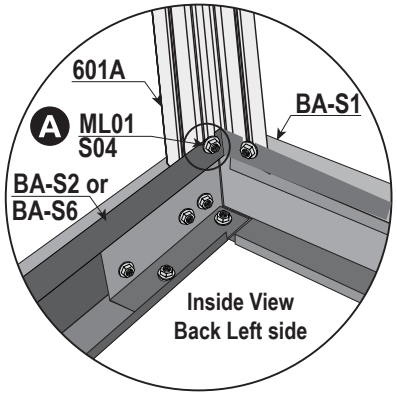

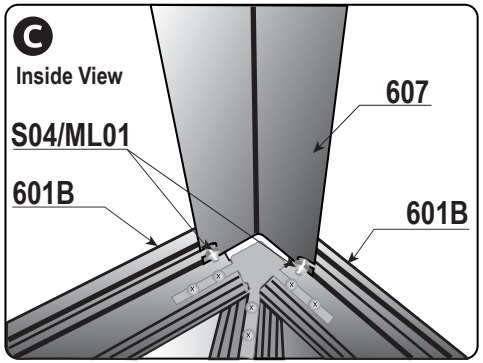

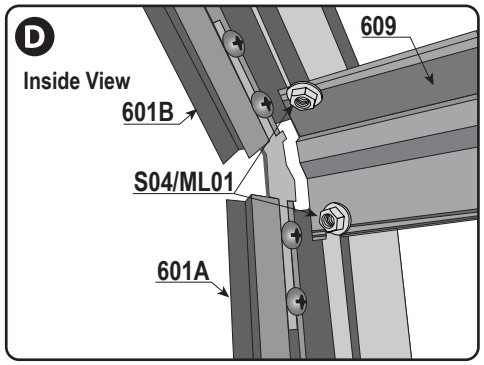

RE-ATTACH BACK WALL ASSEMBLY

YOU WILL NEED AT LEAST 2 PEOPLE TO INSTALL THE BACK DOOR WALL

3.3 Attach back wall **601A's** with back base corners using **W05 Clips** on both sides as shown in **A**. You will switch out the **S04/ML01** combo with the **W05 Clip**.

3.4 Attach bottom of **L08C-X** to rear side section of base kit with **S04/ML01**, as shown in **B**. Attach the **L08C-X** to the **601A** as shown in **C**, make sure the **S04/ML01** combos are tight.

3.5 Use the (2) remaining **W05** clips to attach the back wall where the **604's** meet the base as shown in **D**. You will have to switch out the **S04/ML01** combos that were originally used to the **W05 Clips**.

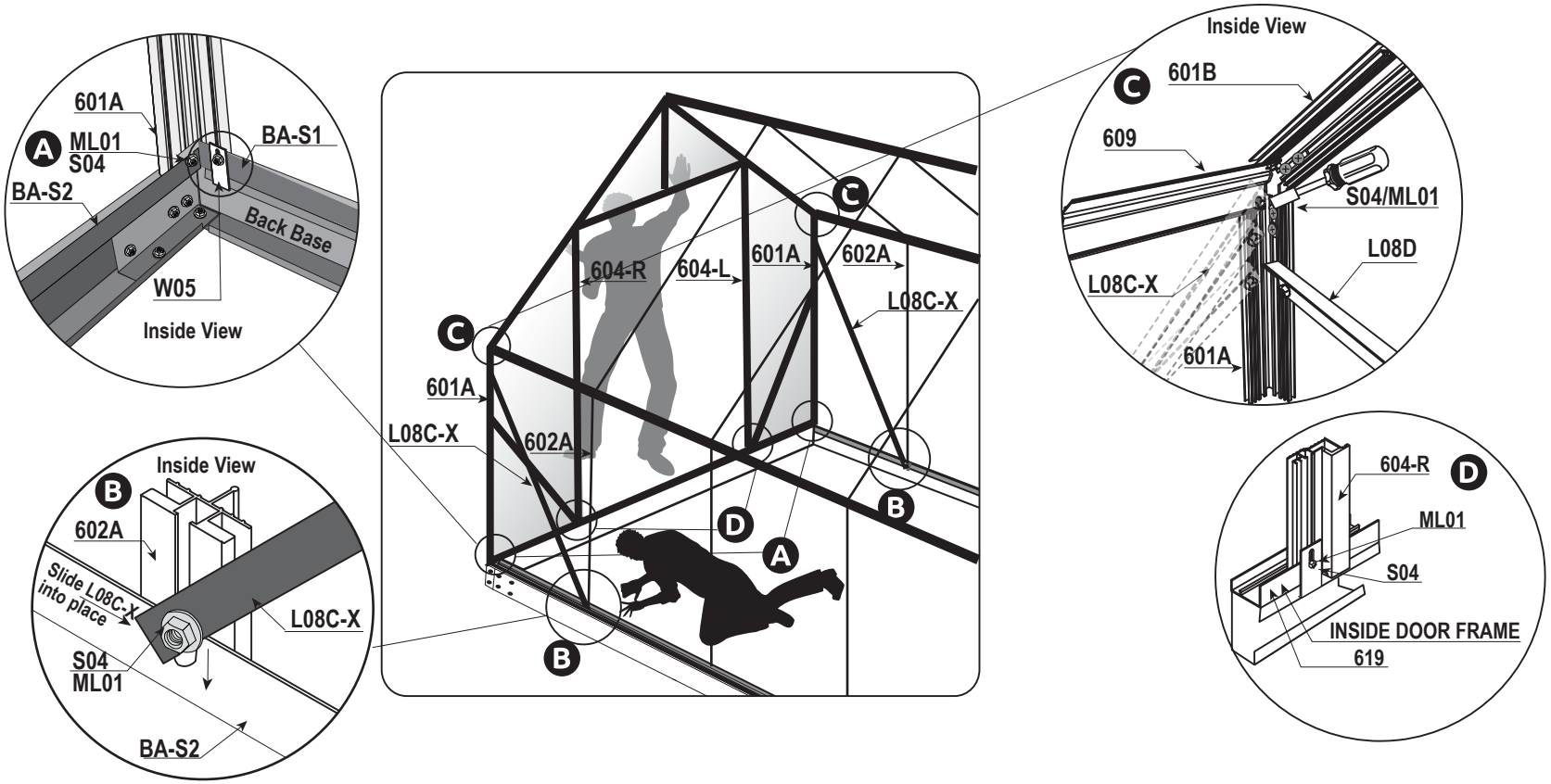

STEP THREE

RE-ATTACH BACK WALL ASSEMBLY

YOU WILL NEED AT LEAST 2 PEOPLE TO INSTALL THE BACK DOOR WALL

STEP THREE

3.6 Attach the back door section **619** to the base using (3) **S04/ML01** fasteners as shown in **A**, then attach the **619-BAR** threshold support to the inside of the **619** with (5) **S19** self tapping screws included in the package, see **B**.

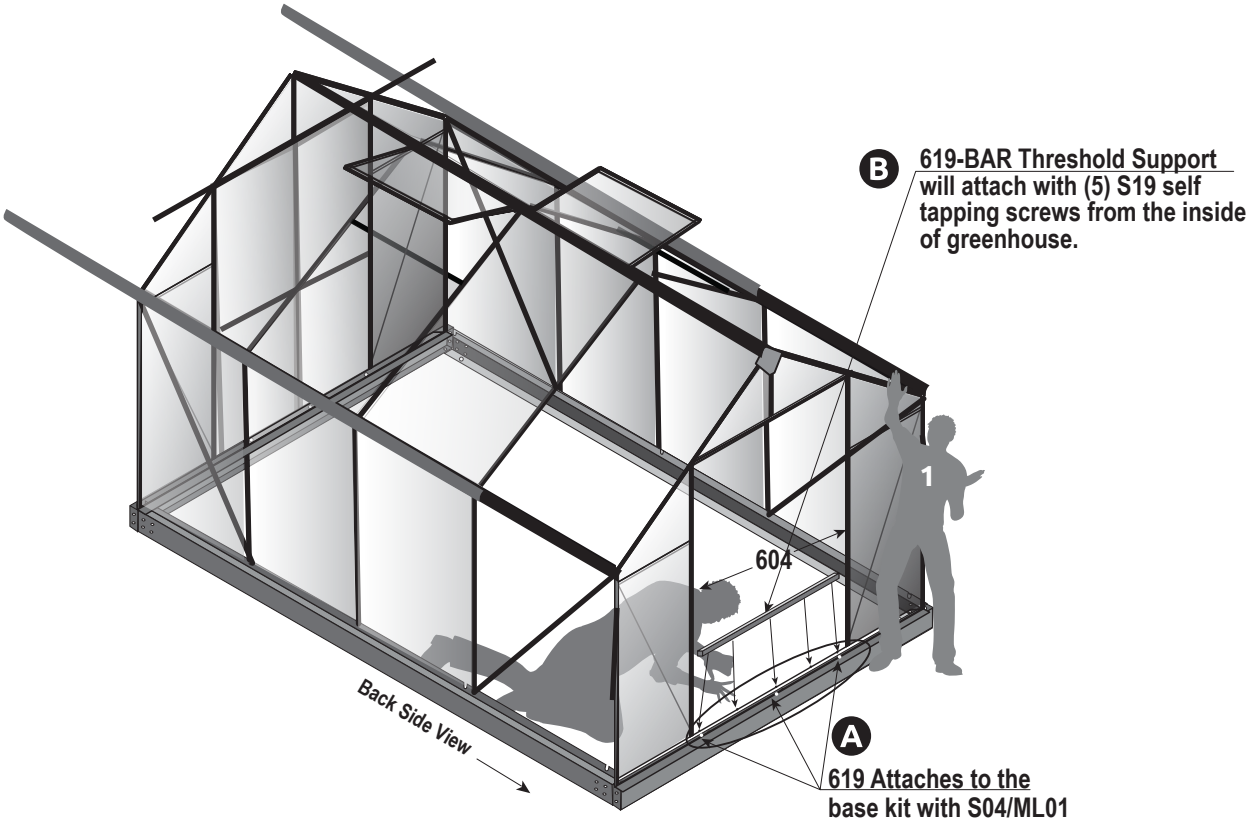

RE-ATTACH BACK WALL ASSEMBLY

YOU WILL NEED AT LEAST 2 PEOPLE TO INSTALL THE BACK DOOR WALL

3.7 Insert **Y6** panels into the side wall sections of your greenhouse as shown.

3.8 Slide **Y7** panels into roof section as shown below, then slide the **610** gutter back into place to lock both panels into place see diagram **A**. Repeat on other side.

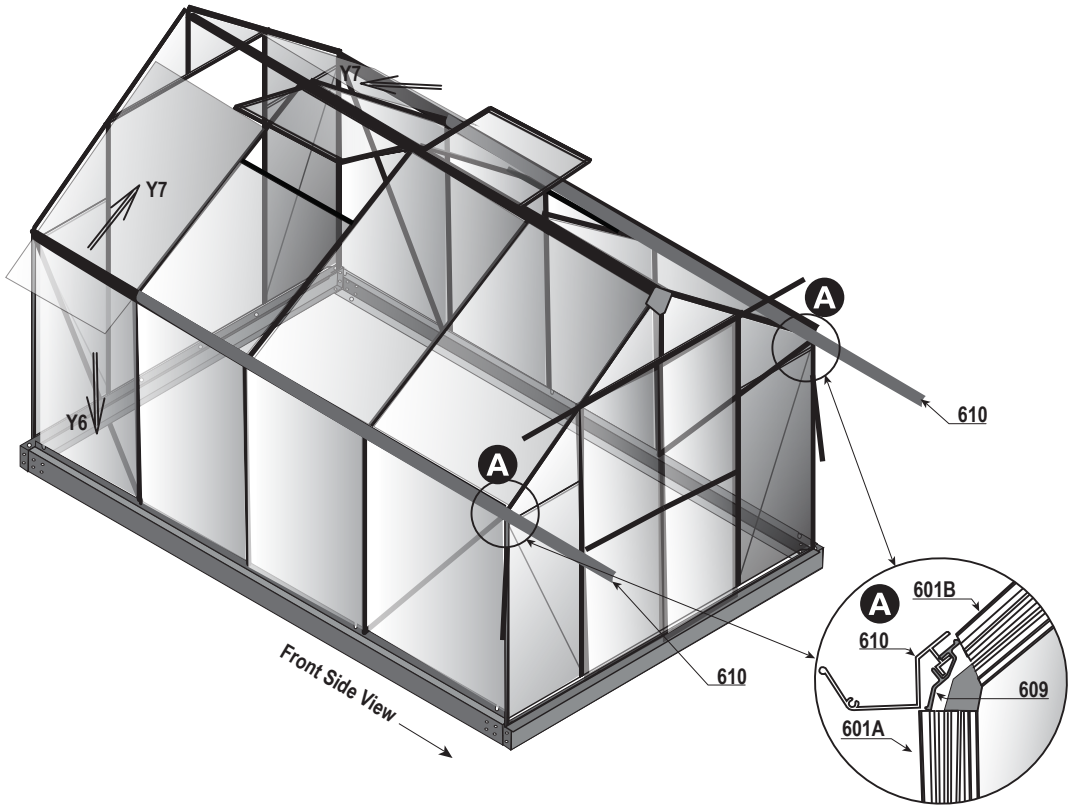

STEP THREE

END CAP INSTALLATION

3.9 Attach end caps to the ridge and gutters on both front and back as shown below. Squeeze a small amount of rubberized silicone or construction adhesive into the ends of ridge to secure pressure fit end caps.

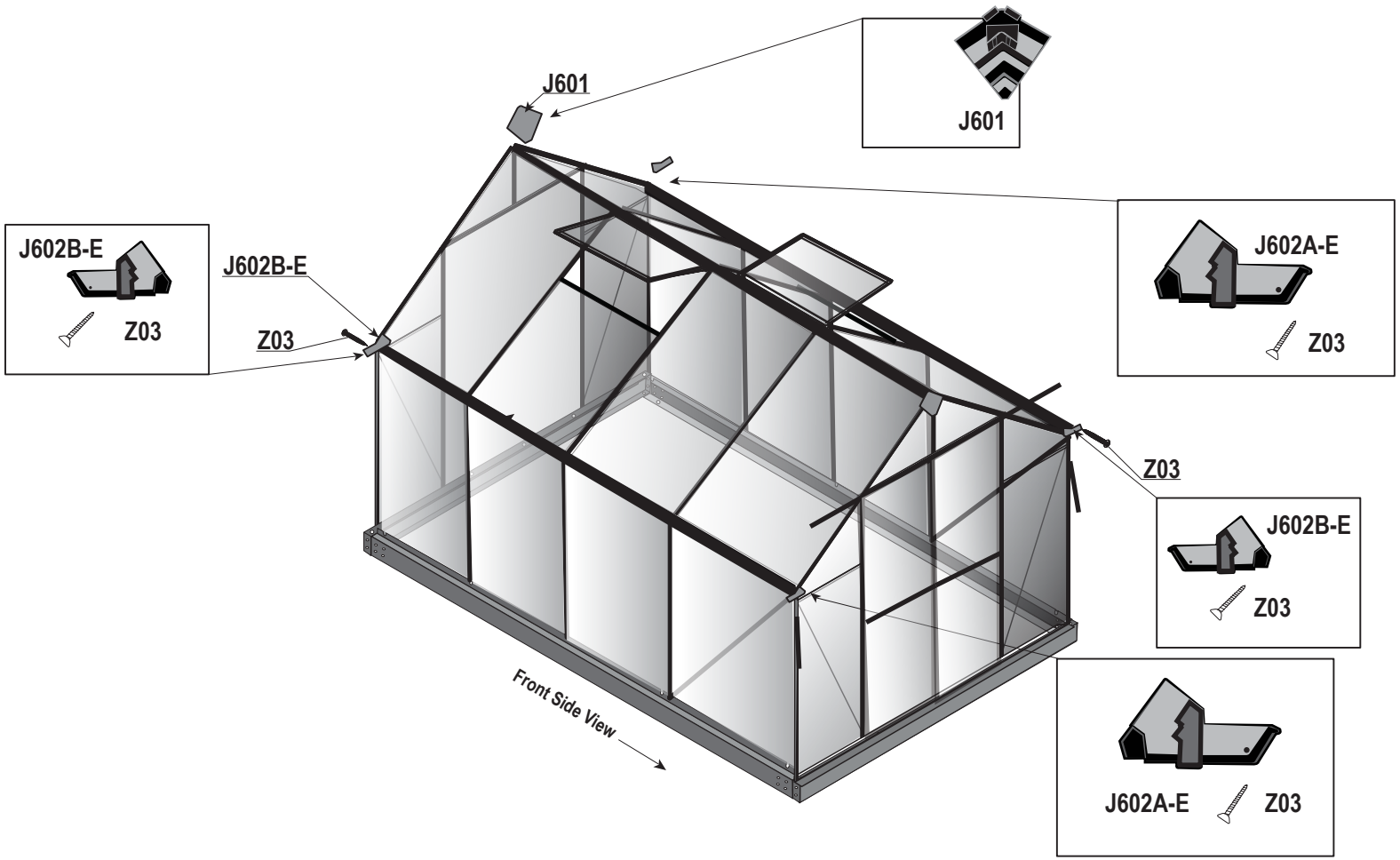

STEP THREE

DOOR ASSEMBLY DIAGRAM

This image shows the inside view of Right Door Assembly.
All parts for door assembly will be found in Back Door Transformation Kit.
Use the #2 head Phillips Screw Driver for installation.

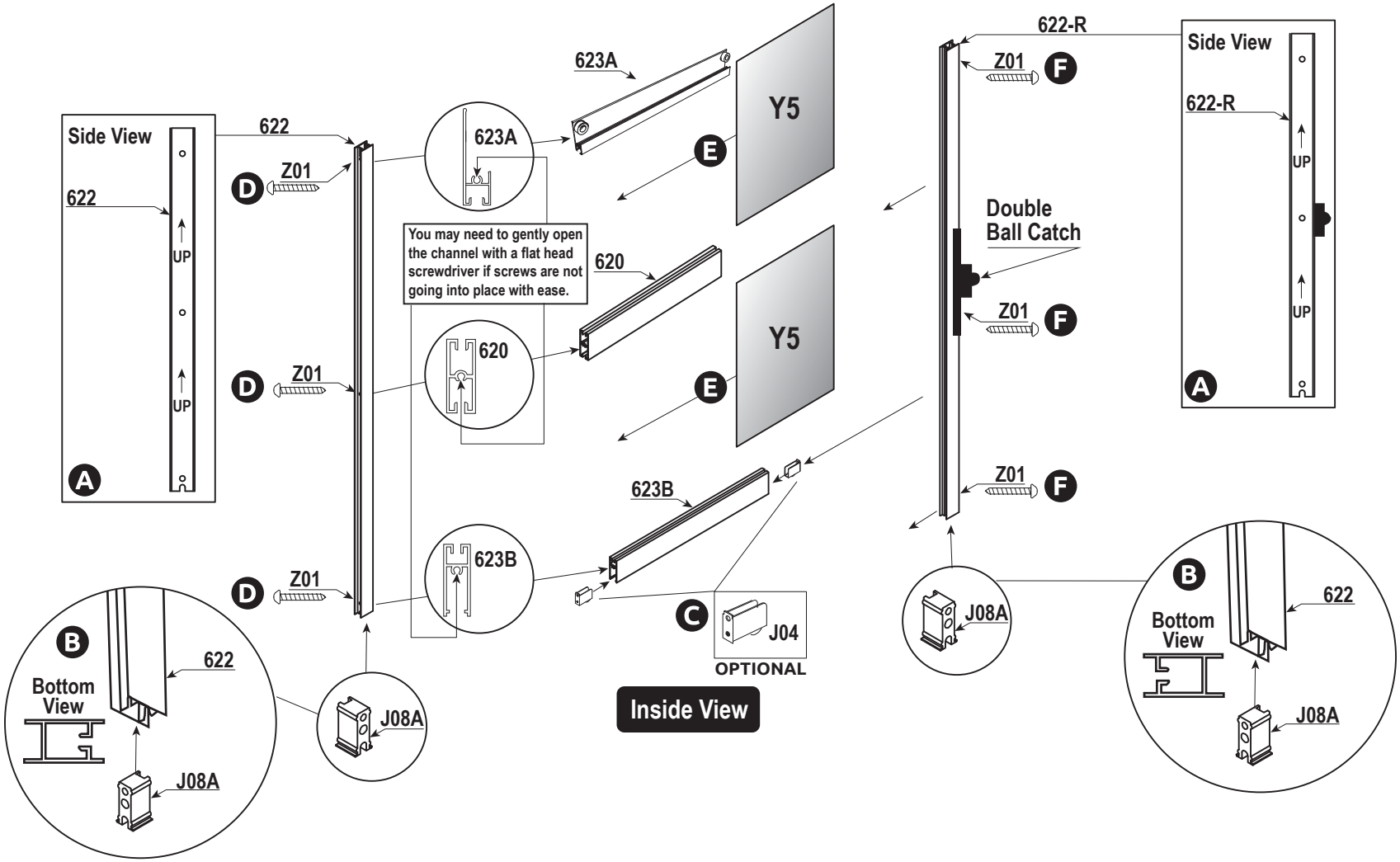

STEP FOUR

DOOR ASSEMBLY

STEP FOUR

We recommend you lay out all parts for both doors to make sure they match up correctly for hanging. Double check the orientation of what is inside verses outside and how the doors will hang on page 24-25. Make sure window panels face the right direction to the sun and note that the panels have pre drilled holes for the handles to attach later and these need to be aligned with the lock mechanisms. This will save you from assembling the wrong way.

2.1 Insert **J08A** into the bottom of the **622**, note the bottom groove is smaller than the top groove of **622**, see **A**.

2.2 Use the **Z01** screws to attach the **622** to the **623B**, **623A** and **620** as shown in **B**.

2.3 Insert **Y5 windows** into position as shown in **C**.

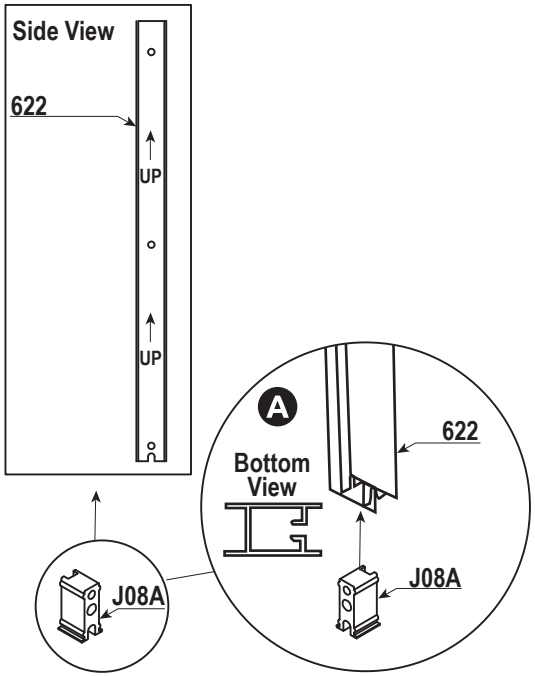

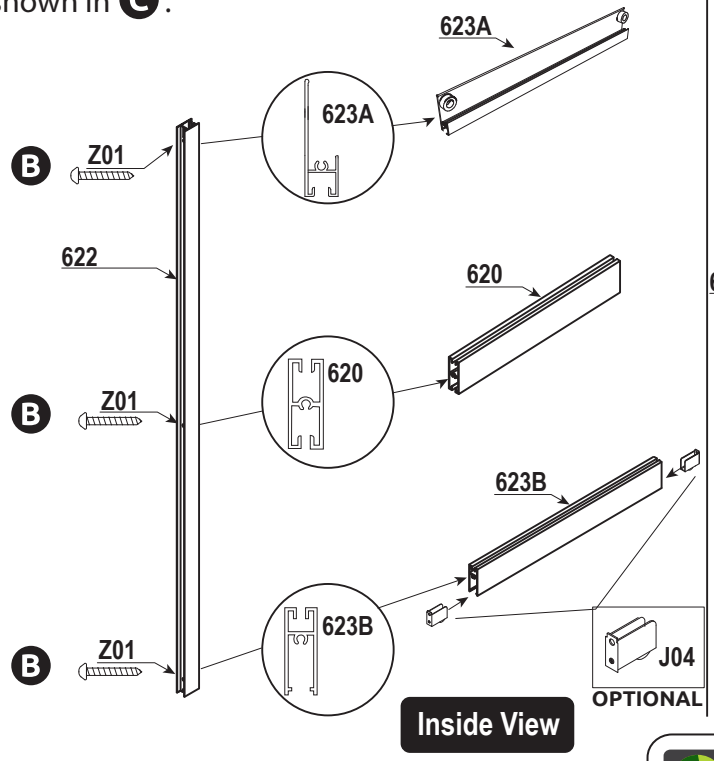

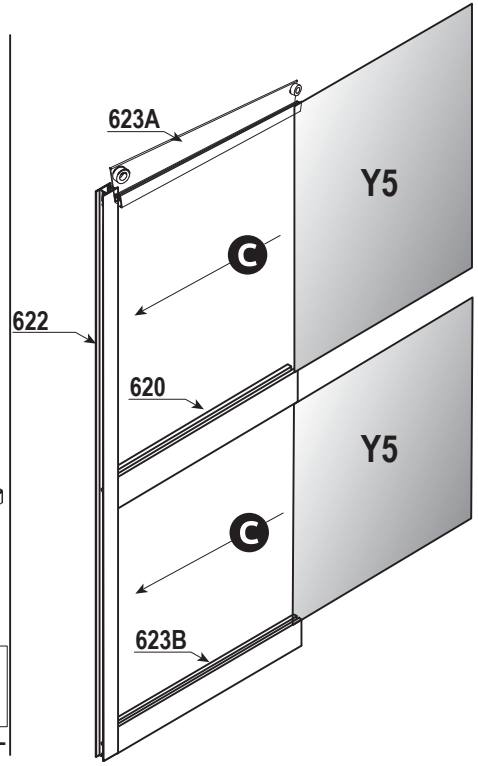

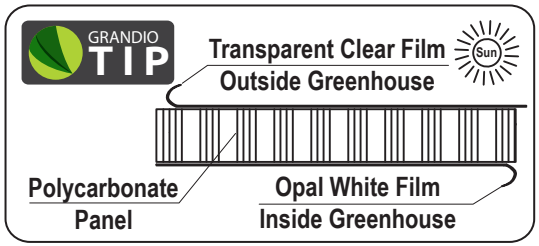

DOOR ASSEMBLY CONTINUED

2.4 Insert **J08A** into the bottom of the **622-R** or **622-L**, note the bottom has a groove see **A**.

2.5 Attach the **622-L** to the **623B**, **623A** and **620** using the **Z01** screws as shown in **B**.

2.6 Follow the same instructions for the other door making sure that the **622-L** and **622-R** with the double ball catch match up so doors will latch closed and slide properly **C**.

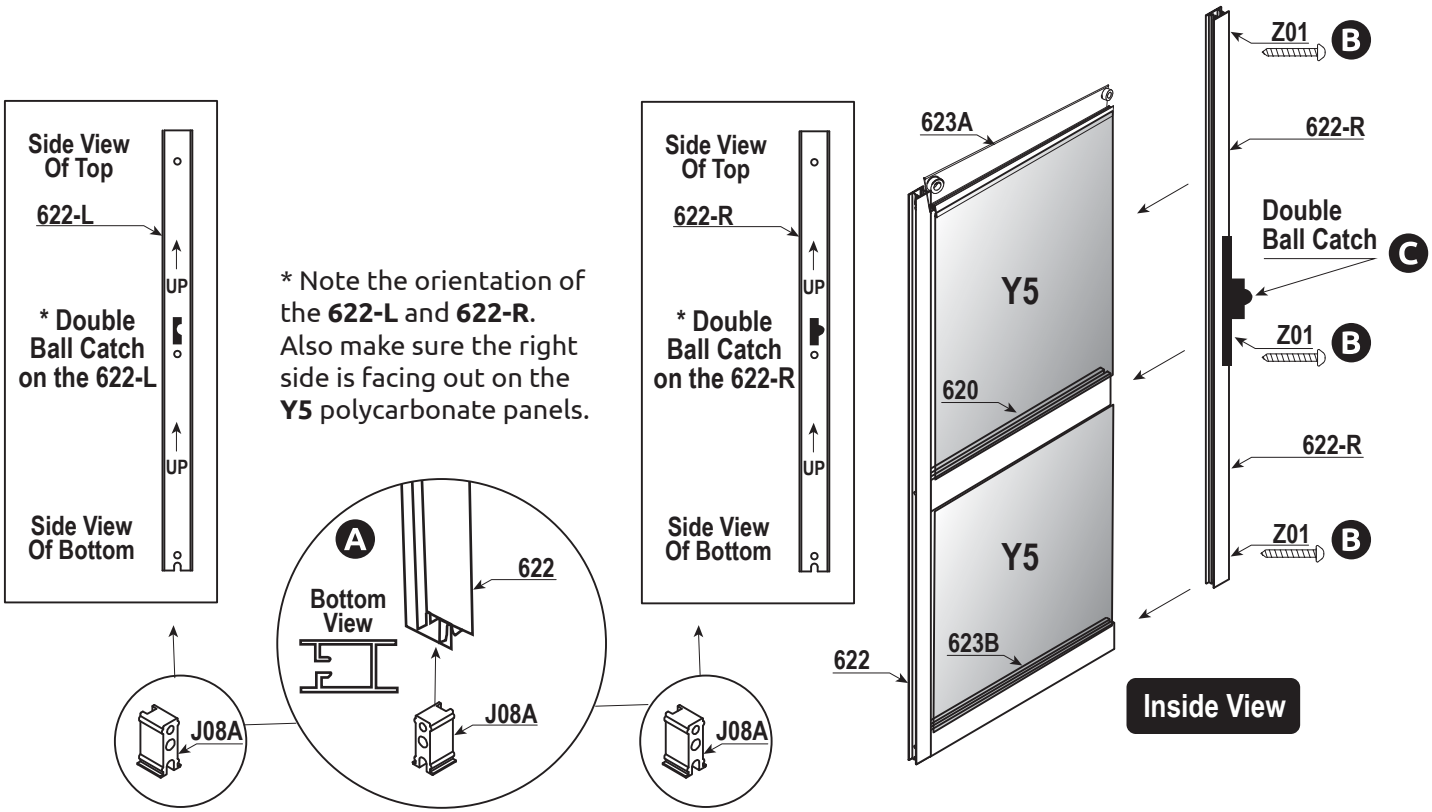

STEP FOUR

DOOR INSTALLATION

2.7 Slide the (2) **S02** bolts down the track of the **L21** see **A**, align with the holes on the **603A** door header. With one person inside the greenhouse line up hanging door track **L21** with door header **603A**, move bolts on **L21** to line up with bolt holes on door header **603A**. From the inside hand tighten the **ML01** nut while the person outside is holding the **L21** in position, you will now center on the front of the greenhouse and tighten the **S02/ML01** combo.

STEP FOUR

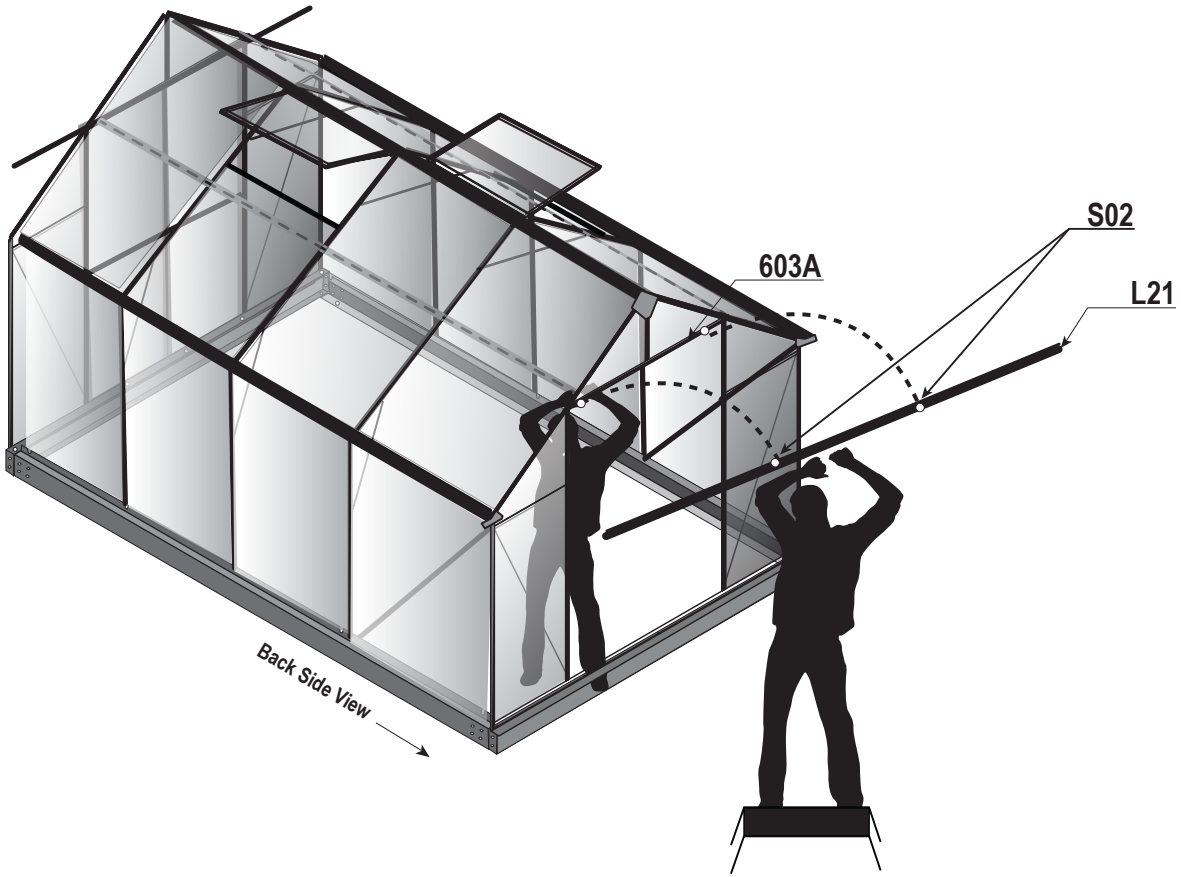

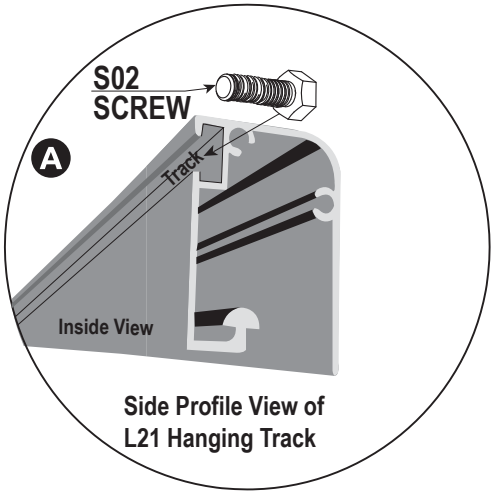

DOOR INSTALLATION

2.8 Separately slide the top of the doors in the left and right side of **L21**, see diagram **A**, until they latch in the middle.

2.9 Attach the door handles **622-HNDL** to both doors using the **622-HNDL-NUT/BOLT** provided to both doors as shown below in **B**, and **C**.

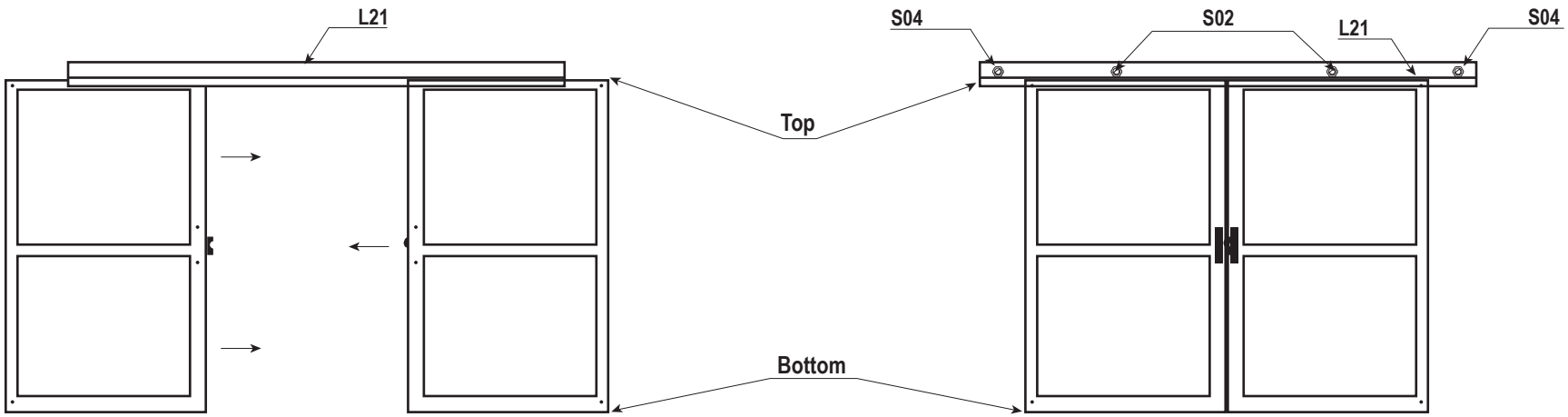

Outside View

Inside View

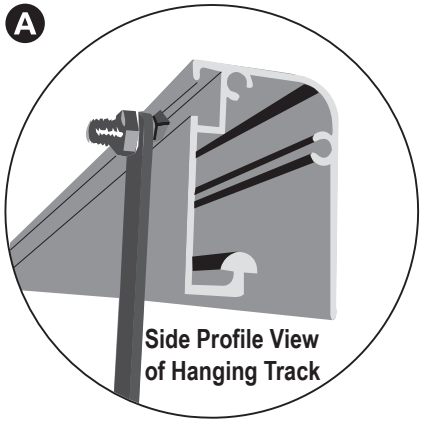

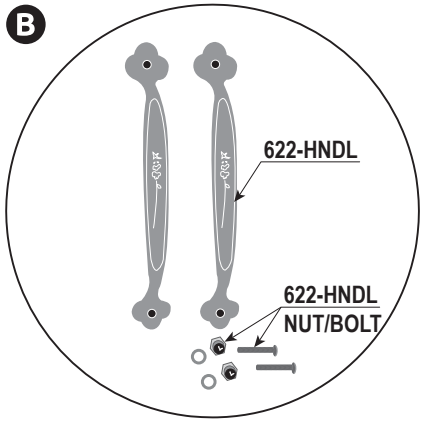

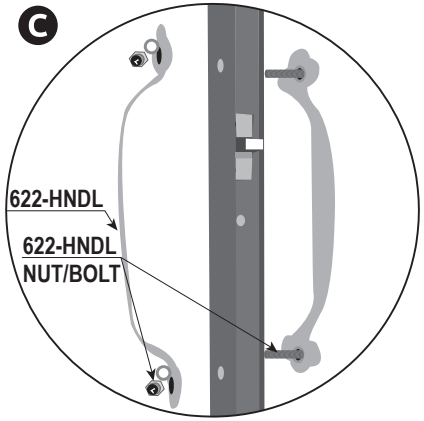

DOOR INSTALLATION

STEP FOUR

2.10 Attach **L28** to **L21** with **S04/ML01,** and **L28** to **601A** with **S02/ML01** as shown below in diagram **A** and **B**. Check that the **L21** and **L28's** are square. Attach (2) **J07** to the ends of **L21** see **C**. The **L28** should align square to the **601A**. Reattach the **L28** on other end also.

2.11 Check that the door locks are snug, you may adjust them with screwdriver if needed as they can be tightened or loosened.

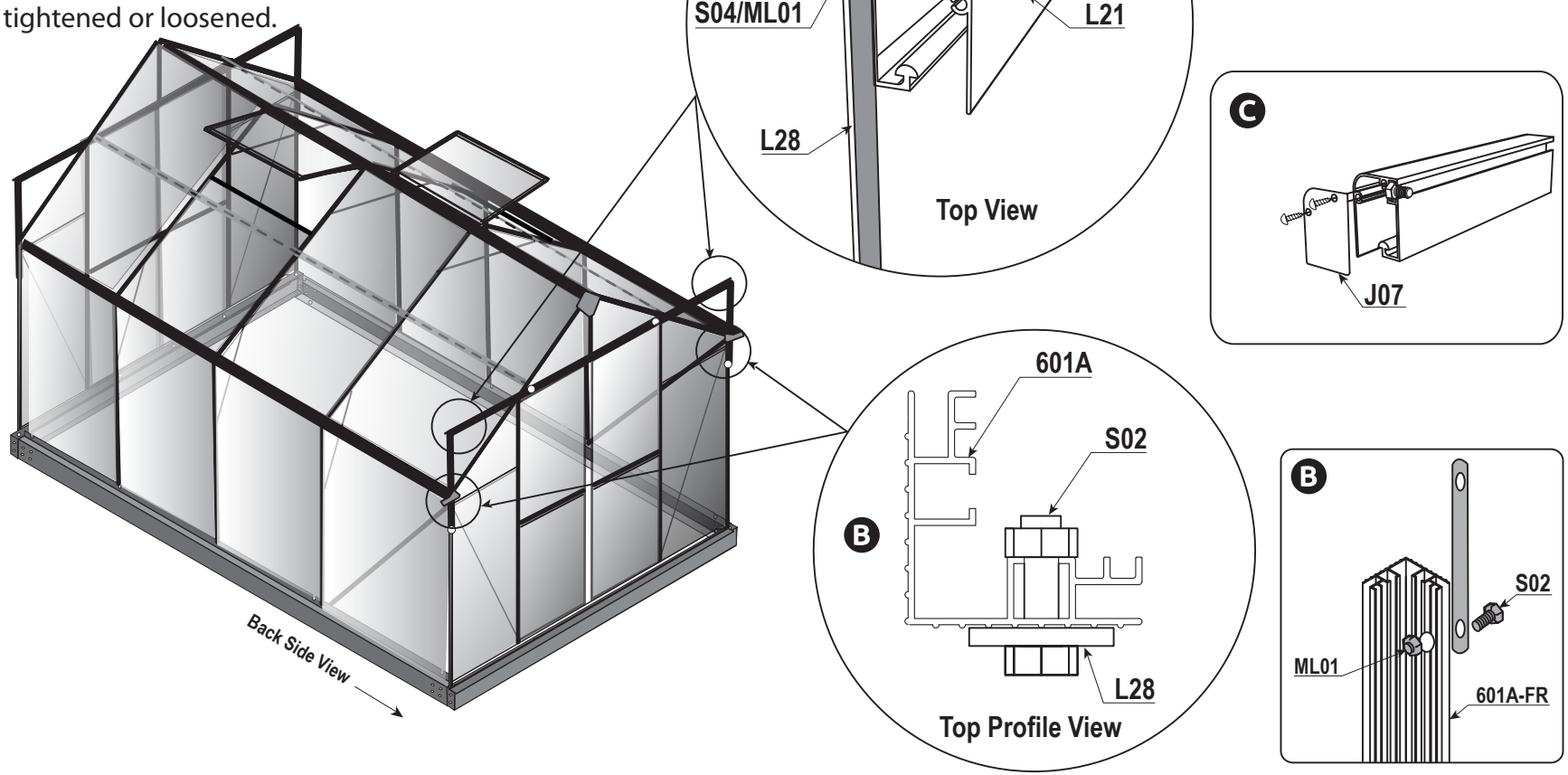

(GRA-ASC-BD) GRANDIO ASCENT BACKDOOR PACKING LIST

GRAPHIC	PART NAME	SIZE/LOCATION	QUANTITY
	603A	47 5/16 in / 1201 mm BACK CORNERS	1
	603C	17 in / 431 mm FRONT LEFT CORNER	1
	604R	68 7/8 in / 1750 mm FRONT RIGHT DOOR	1
	604L	68 7/8 in / 1750 mm FRONT LEFT DOOR	1
	L08D	24 3/16 in / 614 mm	2
	619	94 1/4 in / 2394 mm	1
	622	67 7/8 in / 1724 mm	2
	622-R	67 7/8 in / 1724 mm	1
	622-L	67 7/8 in / 1724 mm	1
	620	21 7/16 in / 545 mm	1
	623A	21 7/16 in / 545 mm	1
	623B	21 5/16 in / 542 mm FRONT RIGHT	1
	J04	BOTTOM DOOR ROLLER	4

GRAPHIC	PART NAME	SIZE/LOCATION	QUANTITY
	J08A	DOOR	4
	Z01	M4*30 SCREWS FOR DOORS	17
	ML01/S04	M6*10	30
	ML01/S02	M6*20	4
	L21	95 1/2 in / 2425 mm	1
	J07	L21 ENDCAP	2
	L28	22 in / 558 mm FRONT RIGHT	2
	W04	CONNECTOR BRACKET	1
	W02-T	DOOR FRAME	2
	Y3-1	UPPER ROOF PANEL	1
	Y3-2	UPPER ROOF PANEL	1
	Y5	DOOR PANELS	4
	1/4 DB	1/4” DRILL BIT	1

Grandio Greenhouse Limited Lifetime Warranty

1. Grandio Greenhouses are warranted to the original purchaser to be free from defects in material or workmanship for ten years from the date of original retail purchase on all plastic panels. Additionally the aluminium frame is warranted for life. The word "defects" is defined as imperfections that impair the use of the product.

2. Defects resulting from misuse, abuse or negligence will void this warranty. This warranty does not cover defects due to improper installation, alteration or accident. This warranty does not cover damage caused by vandalism, rusting, "acts of nature" or any other event beyond the control of the manufacturer.

3. This warranty is nontransferable and is expressly limited to the repair or replacement of defective product if the product is defective within the terms of this warranty, Grandio Greenhouses will repair or replace defective parts at no cost to the purchaser. Shipping charges to and from the factory or distribution center are not covered and are the responsibility of the purchaser. Labor charges and related expenses for removal, installation or replacement of the greenhouse or its components are not covered under this warranty.

4. This warranty does not cover scratching or scuffing of the product that may result from normal usage. In addition, defects resulting from intentional damage, negligence, unreasonable use will void this warranty.

5. Liability for incidental or consequential damages is excluded to the extent permitted by law. While every attempt is made to embody the highest degree of safety in all equipment, freedom from injury cannot be guaranteed. The user assumes all risk of injury resulting from the use of this product. All merchandise is sold on this condition, and no representative of the company may waive or change this policy.

6. This product is not intended for institutional or commercial use; Grandio Greenhouses does not assume any liability for such use.

7. This warranty is expressly in lieu of all other warranties, expressed or implied, including warranties of merchantability for use to extent permitted by Federal and State Law. Neither Grandio Greenhouses nor any representative assumes any other liability in connection with this product. This warranty gives you specific legal rights, and you may also have other rights that vary from state to state.

NOTES

NOTES

GRANDIO

GREENHOUSES

2015 Model Grandio Ascent Back Door Kit

GREENHOUSE USER MANUAL
KEEP IN A SAFE PLACE FOR REFERENCE

CONTACT US IF YOU NEED HELP
OR
HAVE MISSING OR DAMAGED PARTS

GRANDIOGREENHOUSES.COM

BACKYARD LIVING SOURCE, INC.
9543 W. EMERALD ST., SUITE 101
BOISE, ID 83704
1-866-448-8231